Microprocessors and Microcontrollers Course Project

Temperature Monitor Project

Submitted by

Siyon Peter
(Registration No. B241218EE)

Supervised by

Dr. Korra Balu
Assistant Professor
Department of Electrical Engineering
National Institute of Technology Calicut

November 2025

Temperature Monitor Project

November 14, 2025

Introduction

This project involves the design and implementation of a temperature monitoring system using the LM35 temperature sensor, a PIC18F452 microcontroller, and an LCD display. The system measures the ambient temperature and displays it in degrees Celsius on the LCD.

Objective

The objective of the project is to interface the LM35 sensor with the PIC18F452 microcontroller and process analog temperature data for real-time display on an LCD.

About the LM35 Temperature Sensor

The LM35 is a precision temperature sensor that provides an output voltage linearly proportional to the temperature in degrees Celsius. It offers an easy-to-use analog voltage output with a scale factor of 10 mV per C, allowing direct temperature measurement without complex calibration.

Features

- Precise temperature measurement calibrated directly in C
- Linear output voltage: 10 mV/C
- Wide operating temperature range: 55C to +150C
- Low self-heating and low output impedance
- Requires no external calibration
- Low power consumption and cost-effective

Operation

The output voltage from the LM35 is proportional to temperature, for example, 0 V at 0C, 250 mV at 25C, and 1 V at 100C. This voltage is read by the microcontrollers analog-to-digital converter (ADC) and converted to the corresponding temperature value in software.

Applications

LM35 sensors are widely used in temperature monitoring, temperature-controlled systems, HVAC, and environmental data logging due to their accuracy and ease of interfacing.

Components List with Specifications

- **Microcontroller:** PIC18F452
  - 8-bit Microcontroller with 32 KB Flash Memory
  - 16 MHz External Crystal Oscillator
  - 8-channel 10-bit Analog to Digital Converter (ADC)
  - 256 bytes EEPROM Memory for Data Storage
- **LCD Display:** 16x2 Character LCD (HD44780 compatible)
  - Shows 16 characters per line, 2 lines total
  - Interface: 4-bit mode using PORTC pins RC0 to RC5
  - Backlight for clear visibility
- **Power Supply:** +5 V Regulated DC Supply
  - Provides stable power to microcontroller and peripherals
  - Should supply at least 500 mA for all components
- **Voltage Regulator:** 7805 Linear Voltage Regulator
  - Input voltage range: 7 V to 35 V
  - Output voltage: regulated +5 V DC
  - Maximum output current: 1 A
  - Provides stable supply for microcontroller and modules
- **Potentiometer:** 10 kΩ Variable Resistor
  - Used to adjust contrast of the LCD screen
  - Connected typically to LCD V0 pin
- **Temperature Sensor:** LM35
  - Precision temperature sensor calibrated in C
  - Analog output voltage: 10 mV/C
  - Operating temperature range: 55C to +150C
  - Low power, easy interface to microcontrollers
- **Passive Components:**
  - Decoupling capacitors (0.1 μF ceramic) near microcontroller power pins
  - Pull-up resistors (typically 10kohm)
  - Miscellaneous jumper wires and connectors

Circuit Diagram

Refer to the attached circuit diagram for the hardware schematic:

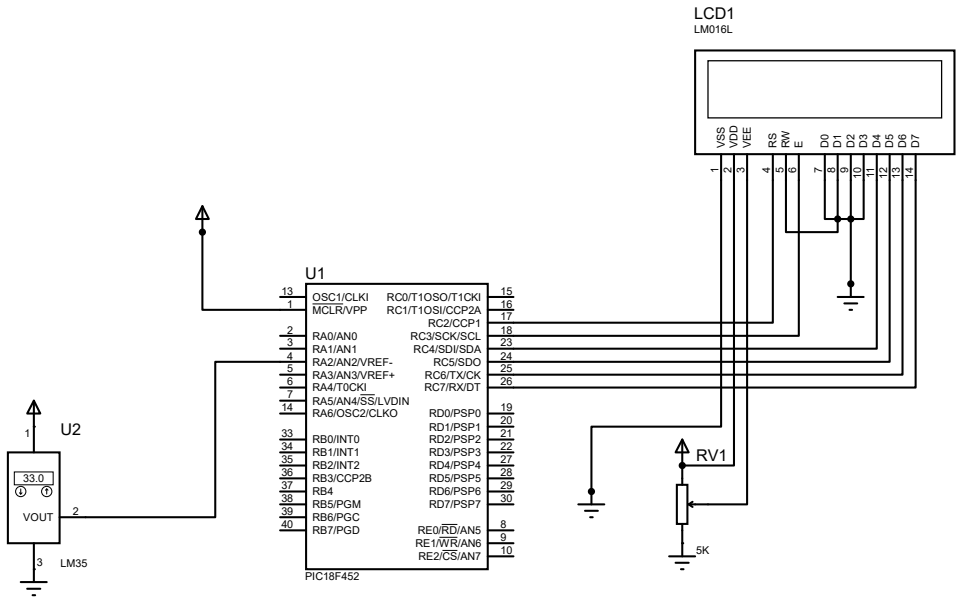

Software Design

C Language Code:

```
sbit LCD_RS at RC2_bit;
sbit LCD_EN at RC3_bit;
sbit LCD_D4 at RC4_bit;
sbit LCD_D5 at RC5_bit;
sbit LCD_D6 at RC6_bit;
sbit LCD_D7 at RC7_bit;

// Direction bits
sbit LCD_RS_Direction at TRISC2_bit;
sbit LCD_EN_Direction at TRISC3_bit;
sbit LCD_D4_Direction at TRISC4_bit;
sbit LCD_D5_Direction at TRISC5_bit;
sbit LCD_D6_Direction at TRISC6_bit;
sbit LCD_D7_Direction at TRISC7_bit;

char tp[7];
unsigned int temp_store;

void main() {
    // Set PORTA as input for LM35 analog input
    TRISA = 0xFF;
    ADCON1 = 0x0E;
    Lcd_Init();
    Delay_ms(100);            // Allow LCD to initialize
    Lcd_Cmd(_LCD_CLEAR);
    Lcd_Cmd(_LCD_CURSOR_OFF);

    Lcd_Out(1, 1, "Temp_Measured:");
    Delay_ms(500);

    while(1) {
        temp_store = ADC_Read(2);         // Read analog value (0  1023
           )
        temp_store = (temp_store * 4.88);
        temp_store = temp_store / 10;     // LM35: 10mV/  C  for   C
           value

        IntToStr(temp_store, tp);
        Lcd_Out(2, 2, tp);
        Lcd_Out(2, 10, "degC");

        Delay_ms(500);
    }
}
```

Procedure

1. Connect the LM35 temperature sensor to the breadboard. Attach the VCC pin to the 5V supply, GND to ground, and connect the output pin to the analog input channel AN2 of the PIC18F452 microcontroller.

2. Wire the 16x2 LCD module to the PIC18F452 according to the pin configuration

used in your code, ensuring all data, register select, and enable lines are properly connected.

3. Configure additional required components, such as decoupling capacitors and pull-down resistors, as per your circuit diagram.

4. Upload and program the provided C code onto the PIC18F452 using an embedded software environment.

5. Power on the circuit. The microcontroller will read the analog voltage from the LM35 sensor, convert it to digital via its ADC, and process the value to calculate temperature in degrees Celsius.

6. The calculated temperature will be displayed on the LCD screen. You can verify the operation by exposing the LM35 sensor to varying temperatures and observing changes in the LCD output.

Pin Connections

Microcontroller (PIC18F452)

- **Oscillator:** 16 MHz Crystal connected to OSC1 and OSC2 pins
- **Power Supply:** VDD and VSS pins connected to +5V and GND respectively

Keypad (4x4 Matrix)

- Rows (Outputs) connected to PORTD pins:
  - R1 → RD4 (LATD4)
  - R2 → RD5 (LATD5)
  - R3 → RD6 (LATD6)
  - R4 → RD7 (LATD7)
- Columns (Inputs) connected to PORTD pins:
  - C1 → RD0 (PORTD0)
  - C2 → RD1 (PORTD1)
  - C3 → RD2 (PORTD2)
  - C4 → RD3 (PORTD3)

LCD Display (16x2, 4-bit mode)

- RS (Register Select) → RC0 (LATC0)
- EN (Enable) → RC1 (LATC1)
- Data pins:
  - D4 → RC2 (LATC2)

Conclusion

The Temperature Monitor Project was successfully implemented using microcontroller interfacing and embedded C programming. The system can be extended for data logging, alarms, or wireless transmission.

References

- PIC18F452 datasheet
- LM35 sensor datasheet